1. General Information

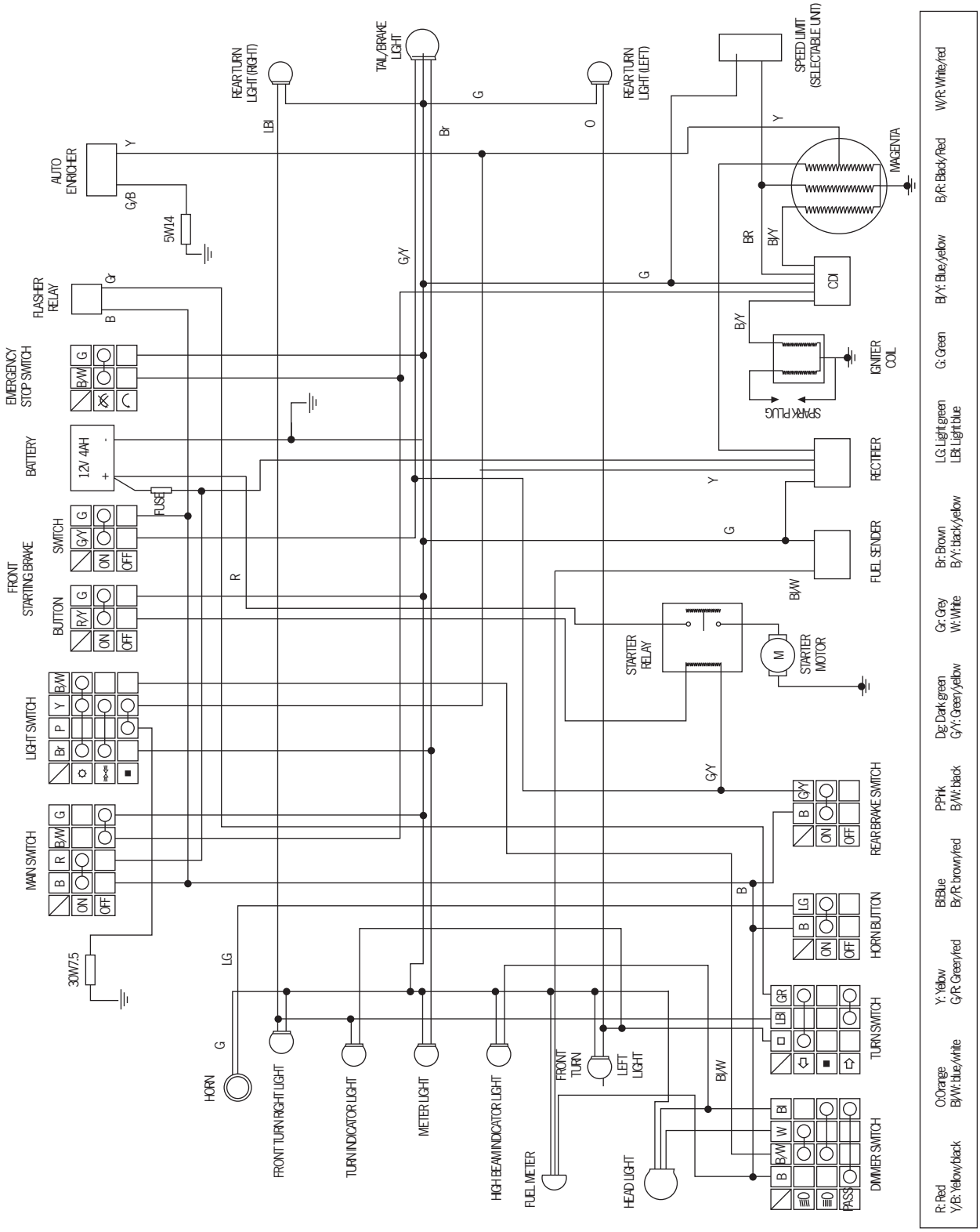

PDF processed with CutePDF evaluation edition www.CutePDF.com